Note: 1/ Material of output shaft is stainless steel;
Material of shaft housing is brass (nickel plated);
2/ Motor painted white;
3/ Without W.E logo.

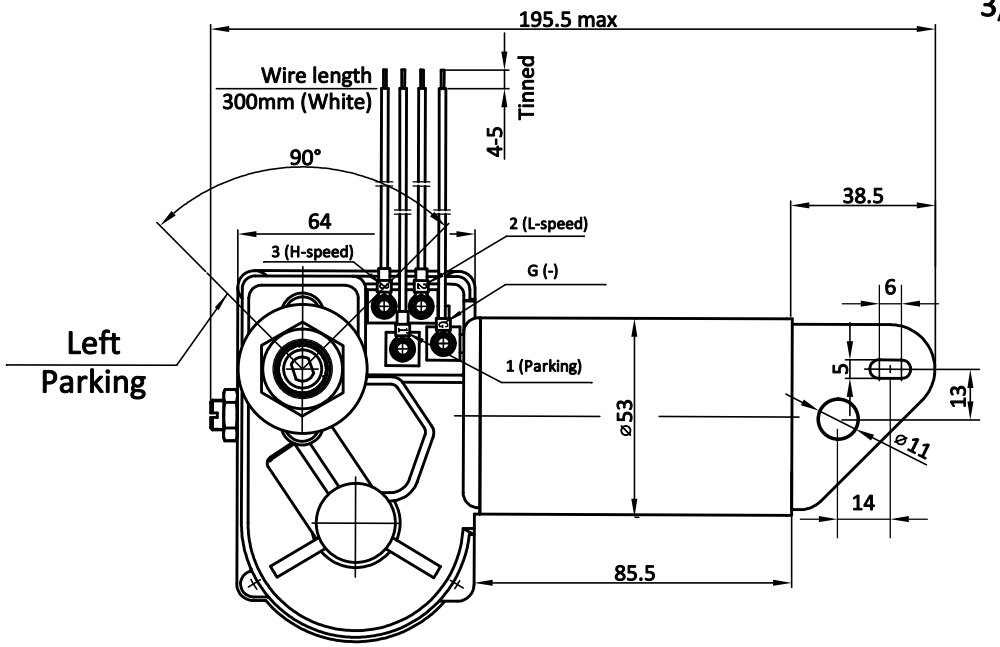

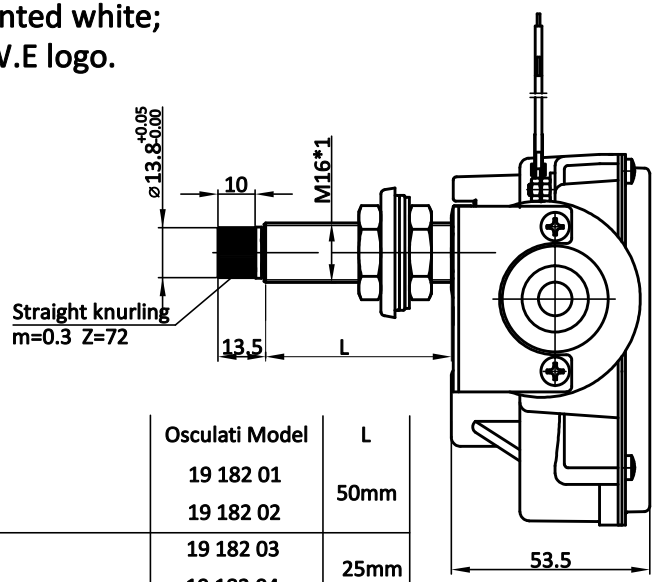

Osculati Model	L
19 182 01 19 182 02	50mm
19 182 03 19 182 04	25mm

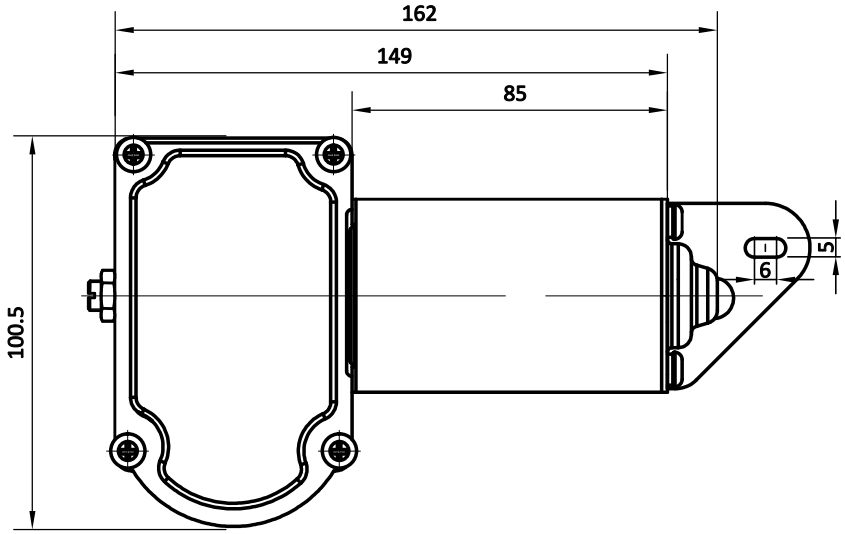

Circuit diagram

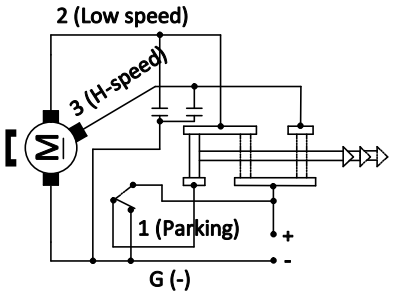

Item	Data			
Rated voltage	12V		24V	
Test voltage	13.5V		27V	
Wiping speed	30±5~45±5rpm			
No-load current	H-speed	L-speed	H-speed	L-speed
	≤20	≤15	≤15	≤1
Rated torque	3.43Nm (L-speed)			
Brake torque	≥12N.m (L-speed)			
Noise	≤55dB(A)			

Note: 1 - Parking;
2 - Low speed;
3 - High speed

				Wiper motor	
		Signature	Date		Customer: Osculati S.P.A
Issued by			2014.1.20		Model / Part no.: 19 182 01, 19 182 02, 19 182 03, 19 182 04
				View	Drawing #
				Ratio: 1:1	Version: A

Signature
Date
2013.6.20